KFG20

Number	Part Number	Description	Kit Number
13	9810309402	Φ45mm Drawtube M12 Horizontal & Vertical Bolt Holes	N/A
12	200406.001	65mm Overrun Lever Assembly	N/A
11	205682PL	Bolt-on Skid	206593.001
10C	510001PL & 21004084	Extra Long Handle & Pad	N/A
10B	51002194 & 21004084	Long Handle & Pad	576011
10A	51002094 & 21004084	Standard Handle & Pad	577000
9	21003593	Damper Bracket	N/A
8	4300739302	Grab Handle (Black Finsih)	N/A
7	206625.003	Energy Store Bracket	N/A
6	990035.001	Oil Damped Spring pack Energy Store	202453.001
5	6J1389.001	Handbrake Lever Assembly	N/A
4	506015	Lockable Cast Coupling Head	575003 incl. 6E5003.001
3	6E5003.001	Packing Shim Φ45 inner Φ50 outer	See Above
2	501011	Bellow	577004
1	87001109	Damper 1100 - 2000kg	576001

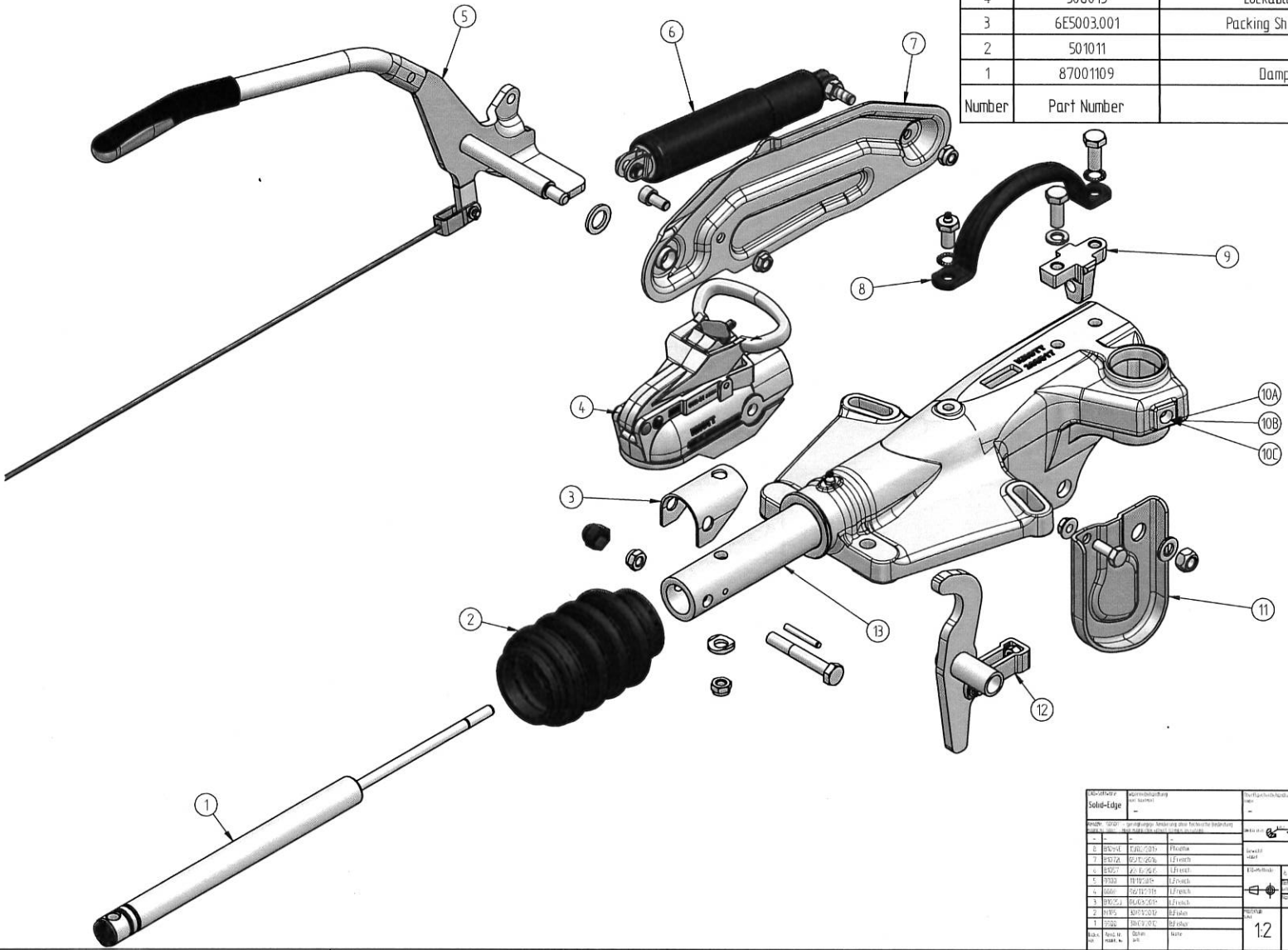

Solid-Edge			
8	8/09/10	17/08/10	P.Fischer
7	8/07/10	22/12/2010	L.French
6	8/07/10	22/12/2010	L.French
5	9/10/10	11/11/2010	L.French
4	9/10/10	08/11/2010	L.French
3	8/09/10	08/09/2010	L.French
2	8/09/10	30/09/2010	B.Fisher
1	9/10/10	30/09/2010	B.Fisher

21/09/2010	17/08/10	501021	(See Table)
P.McGiven	B.Fisher		
1:2	KNOTT GROUP BRAKE AND TRAILER TECHNOLOGY	Auflaufeinrichtung Overrun coupling KFG20-A 1100-2000 Kg	2 2 A1